SQUARE DIFFUSER

MANUFACTURER OF AIR OUTLETS :

Grills, Diffusers, Control Volume Damper (VCD), Non Return Damper (NRD), Fire Rated Air Ducting and Louvers Systems.

FABRICATION OF GI DUCTS, PI DUCTS, FLEXIBLE DUCTS & EXHAUST AND FRESH AIR LOUVERS

SALE OF FIRE DAMPERS, MOTORIZED SMOKE FIRE DAMPER (MSFD)

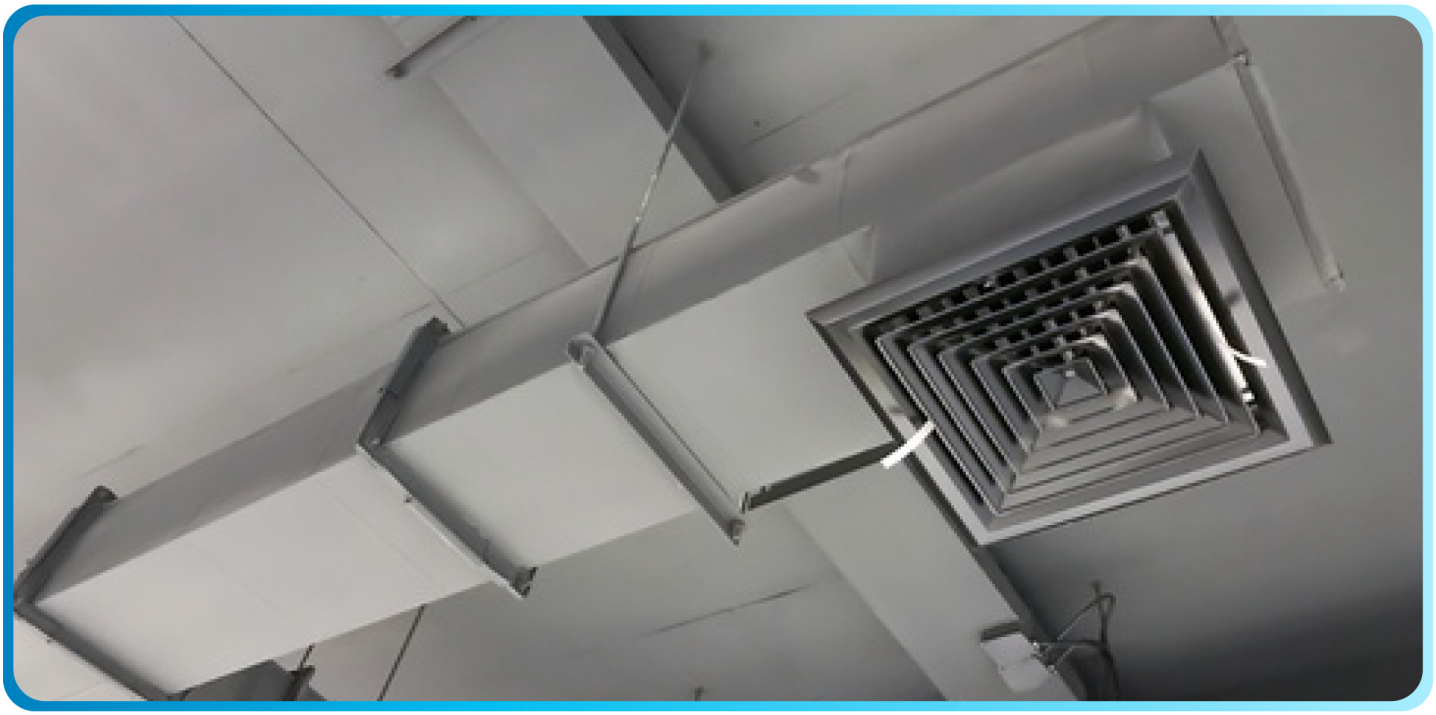

SQUARE DIFFUSER

AIRPRO Multi directional diffusers represent an optimum solution for the diffusion of air from ceiling in modern concept areas with huge use of extruded aluminum profiles. The different shape of the cones in respect to the number of airflows (1, 2, 3 & 4 ways) can itself create an aesthetic element to be utilized.

Features:

Material: Outer frame is extruded aluminum section cut to length and joined at corners and deep drawn aluminum sheets. Available in both square and rectangular shapes.
Units are flush mounted and available with different pattern arrangements 1, 2, 3 and 4 ways (i.e. different way of air discharge directions).
Available in a wide variety of standard neck sizes ranging from 150 x 150 up to 600 x 600 mm in 75 mm increments.
Square diffusers have a pleasing appearance and synch with the ceiling. The inner cones are fully removable which also provide for easy:

- Installation
- Adjustment of key operated OBD
- Maintenance
- Core exchange by different pattern

The core is held in place and fixed to the frame by two loaded spiral galvanized steel springs.

Popular sizes of Square Diffusers, duct size, neck size and opening size on ceiling are given below for reference:

Nominal Size		Neck Size	Outer Size	Duct Size	Ceiling Opening
mm	inches	mm	mm	mm	mm
150 x 150	6″ x 6″	145 x 145	293 x 293	150 x 150	233 x 233
225 x 225	9″ x 9″	220 x 220	368 x 368	225 x 225	308 x 308
300 x 300	12″ x 12″	295 x 295	443 x 443	300 x 300	383 x 383
375 x 375	15″ x 15″	370 x 370	518 x 518	375 x 375	458 x 458
450 x 450	18″ x 18″	445 x 445	593 x 593	450 x 450	533 x 533
525 x 525	21″ x 21″	520 x 520	668 x 668	525 x 525	608 x 608
600 x 600	24″ x 24″	595 x 595	743 x 743	600 x 600	683 x 683



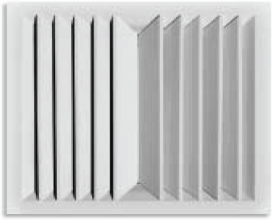


SQUARE DIFFUSER

AIRPRO Square Diffuser - Supply One Way Throw

- **Model Name: AP-DS1-D**

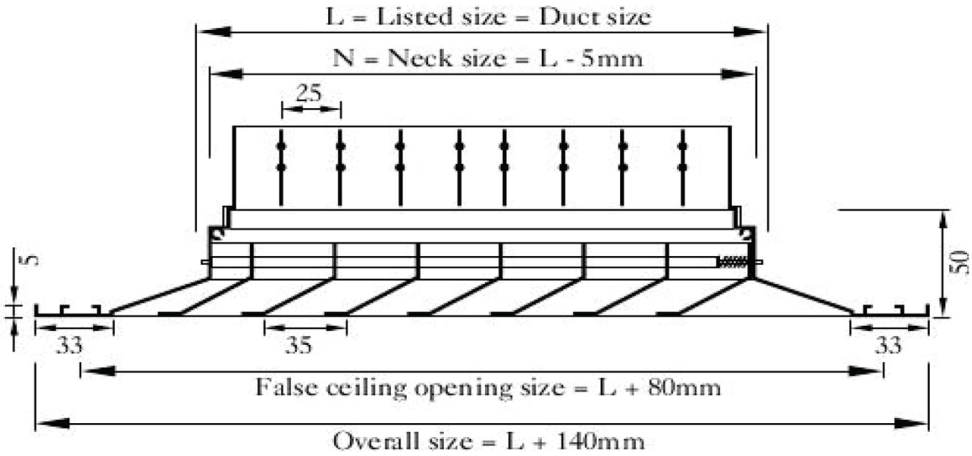

- **Model Name: AP-DS1**

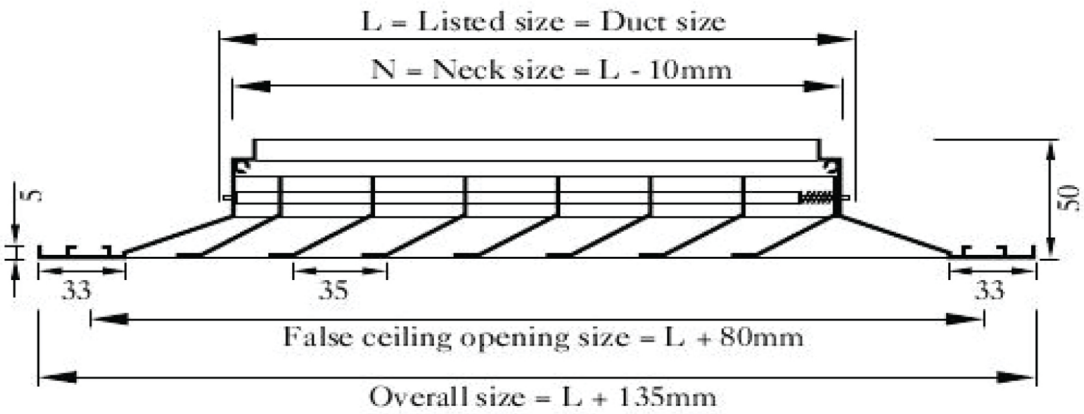

SQUARE DIFFUSER

AIRPRO Square Diffuser - Supply Two Way Throw

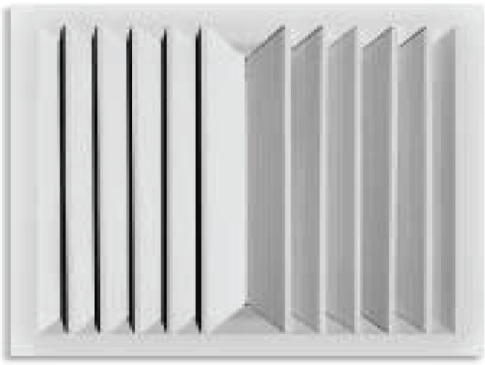

Model Name: AP-DS2-D

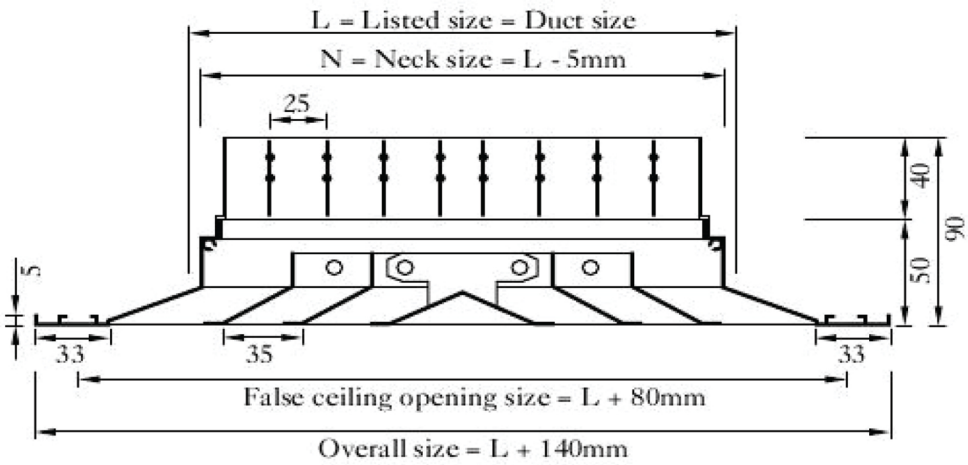

Model AP-DS2

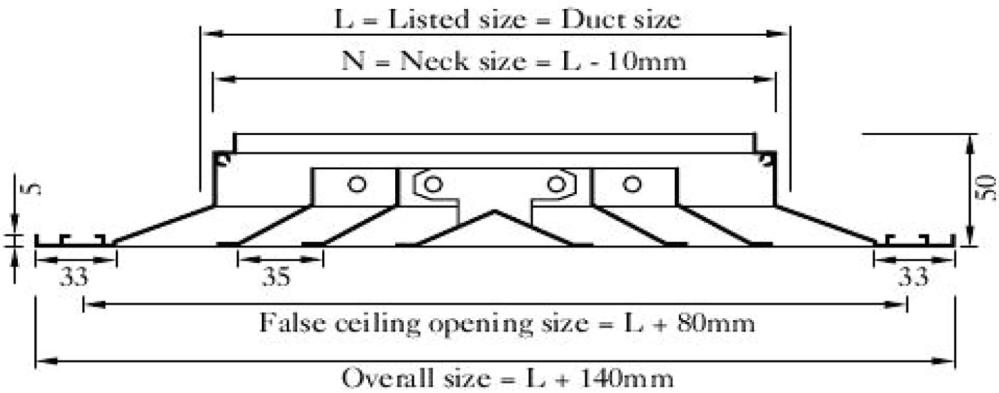

SQUARE DIFFUSER

AIRPRO Square Diffuser - Supply Three Way Throw

Model Name: AP-DS3-D

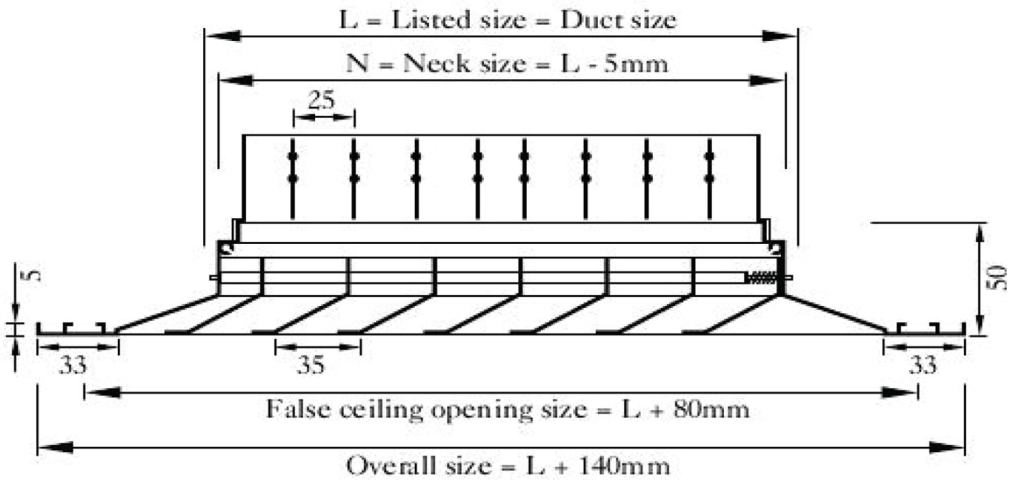

Model Name: AP-DS3

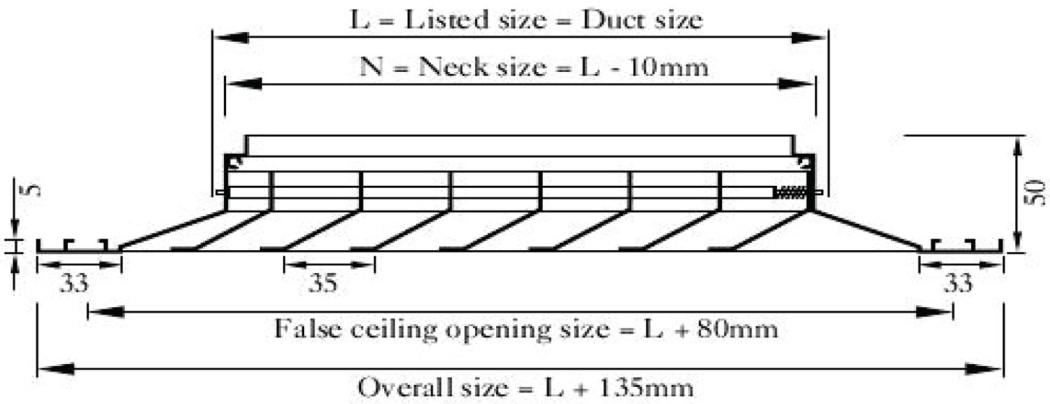

SQUARE DIFFUSER

AIRPRO Square Diffuser - Supply Four Way Throw

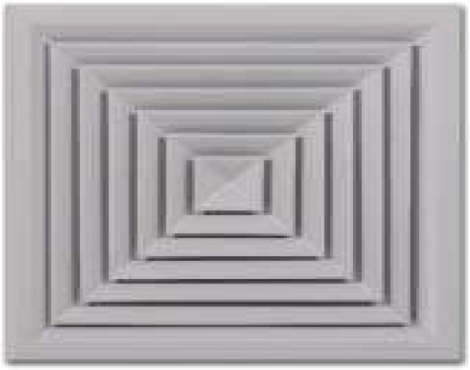

Model Name: AP-DS4-D

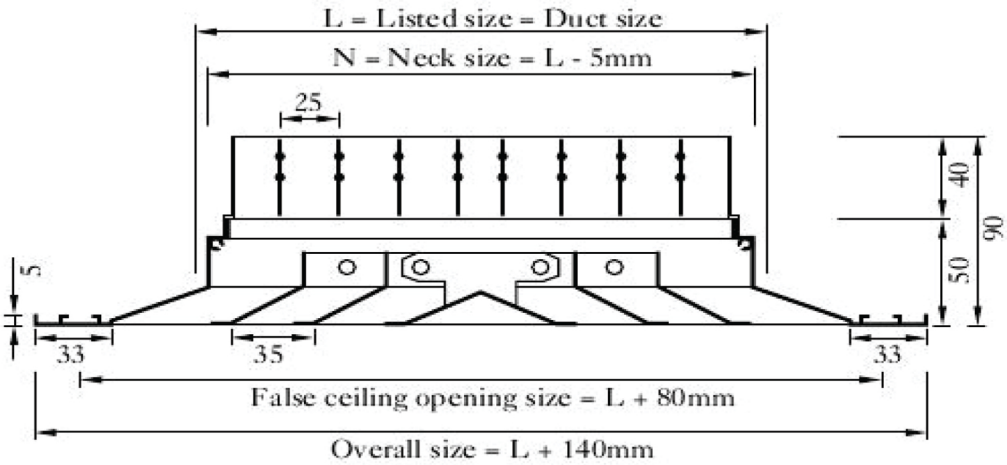

Model Name: AP-DS4

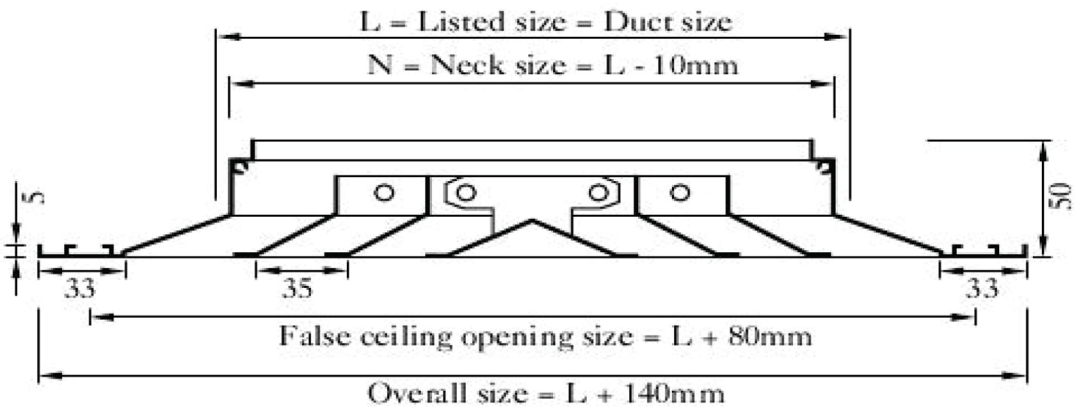

SQUARE DIFFUSER

Diffuser without opposed blade and foam gasket.
Suitable for return air applications

Frame and core: High-quality extruded aluminum profile with 33mm flange width.

Damper Frame and core: High-quality extruded aluminum profile with a natural aluminum finish. Black matt finish as an option.

Description:

- The frame and blades are of high-quality extruded aluminium profile construction with the advantages of corrosion resistance and rigidity.
- Louvered type core is fixed to the frame with aluminium pins loaded with steel springs. The core can be easily removable and interchangeable to allow for maximum flexibility in installation, maintenance, and damper adjustment.
- The damper is fixed rigidly to the frame by aluminium rivets. Fixing by spring clips as an option.
- Damper blades are separated from its frame by nylon bushes.
- Opposed blade damper is screw operated from the face opening of the diffuser after removing the internal core. Lever operated damper as option.
- Discharges air horizontally in one way, either X or Y directions as per pattern arrangement.
- Foam gasket is sealed around the back of the frame as option to avoid air leakage.
- Available in rectangular sizes as option.
- Suitable for flush mounting inlay in type ceiling.

SQUARE DIFFUSER

AIRPRO Rectangular Diffuser - Supply Four Way Throw

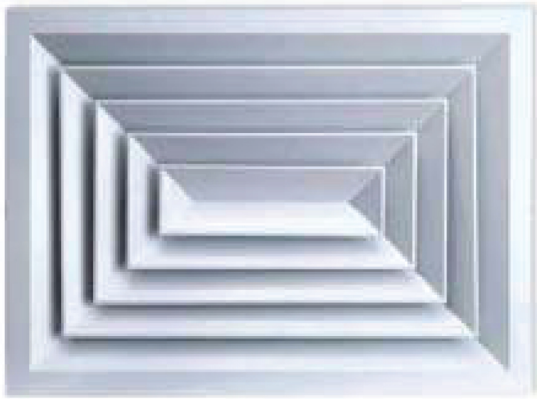

- **Model Name: AP-DR4 -D**

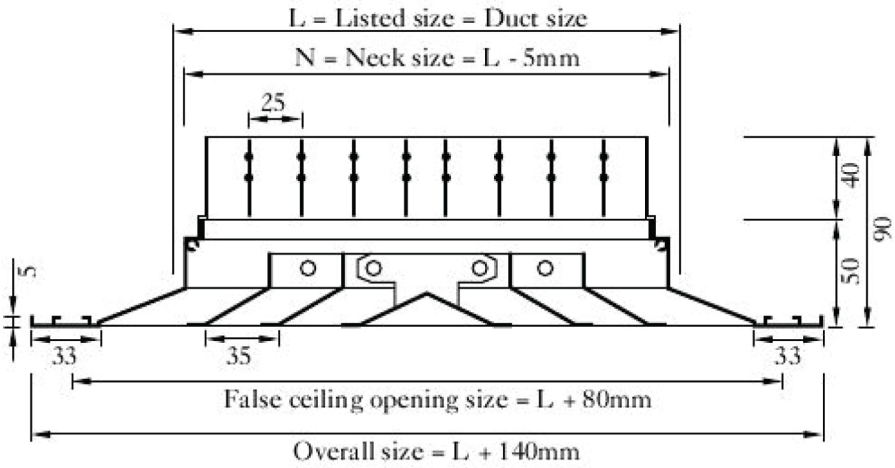

- **Model Name: AP-DR4**

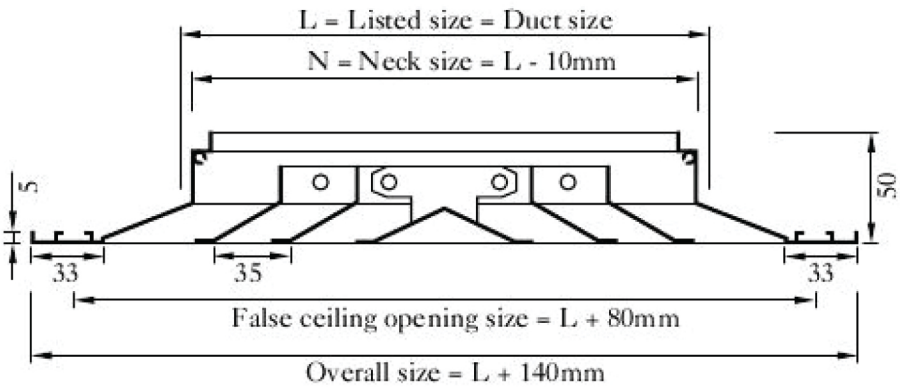

SQUARE DIFFUSER

Diffuser without opposed blade damper and foam gasket. Suitable for return air applications

Frame and core: High-quality extruded aluminum profile with 33mm flange width.

Damper Frame and core: High-quality extruded aluminum profile with a natural aluminum finish. Black matte finish as an option.

Description:

- The frame and blades are of high-quality extruded aluminium profiled construction with the advantages of corrosion resistance and rigidity.
- Diffusers shall be coned type with each cone manufactured by extruded aluminium louvered profiles, arranged in concentric cones to defect air equally in four directions.
- The damper is fixed rigidly to the frame by aluminium rivets. Fixing by spring clips as an option.
- Damper blades are separated from its frame by nylon bushes.
- Foam gasket is sealed around the back of the frame as option to avoid air leakage.
- This product can be manufactured for one, two, three and four way throws.
- Available in rectangular sizes as option.

SQUARE DIFFUSER

Core Pattern Ceiling Diffuser

Air pattern	Square	Rectangular	
One way	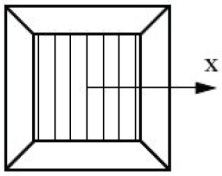 AP-AV-DS1	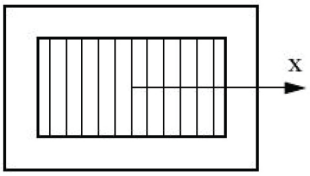 AP-AV-DR2-X	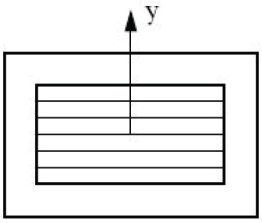 AP-AV-DR1-Y
Two way	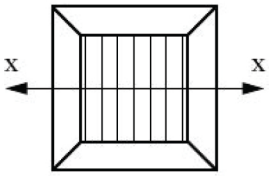 AP-AV-DS2	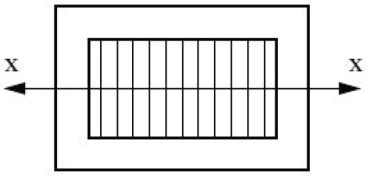 AP-AV-DR2-X	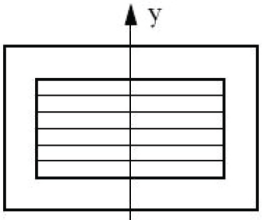 AP-AV-DR1-Y
Two way corner	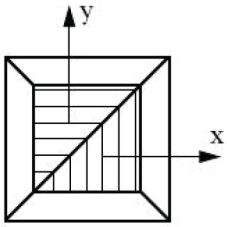 AP-AV-DS2-C	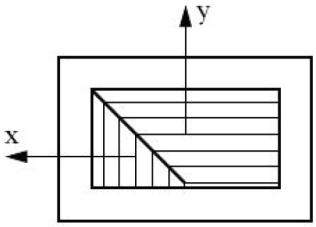 AP-AV-DR2-C1	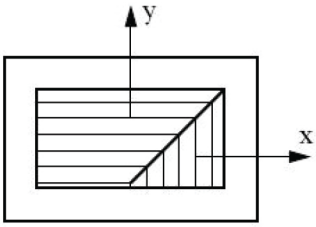 AP-AV-DR2-C2
Three way	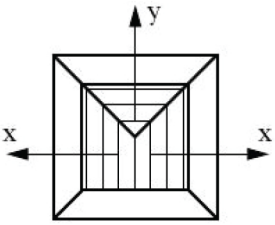 AP-AV-DS3	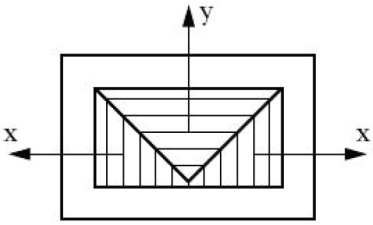 AP-AV-DR3-X	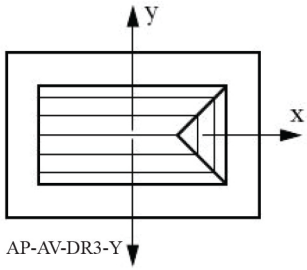 AP-AV-DR3-Y
Four way	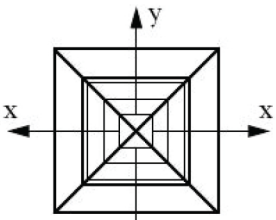 AP-AV-DS4		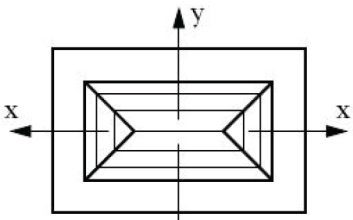 AP-AV-DR4

SQUARE DIFFUSER

Diffuser Accessories

Equalizing Grid:

- Equalizing grid is fixed to the damper with rivets.
- Equalizing grid is manufactured from high quality aluminium profiles with aerofoil blades connected by plastic bushes. Finish will be the same as the damper
- This assembly will provide air distribution over the neck of the diffuser, which ensures reduction in pressure drop, noise and turbulence.

Filters:

- Ceiling diffusers available with removable type washable aluminium filters with aluminium mesh as the filter media.
- Fabricated from 1 mm thick aluminium sheet with aluminium mesh as the filter media.
- Structure will have high dust holding capacity and low resistance to air flow.
- Other insulating materials available as option.
- Filter frame is screw fixed to the diffuser.
- Generally available in 12, 25, 40 and 50 mm thickness as standard.

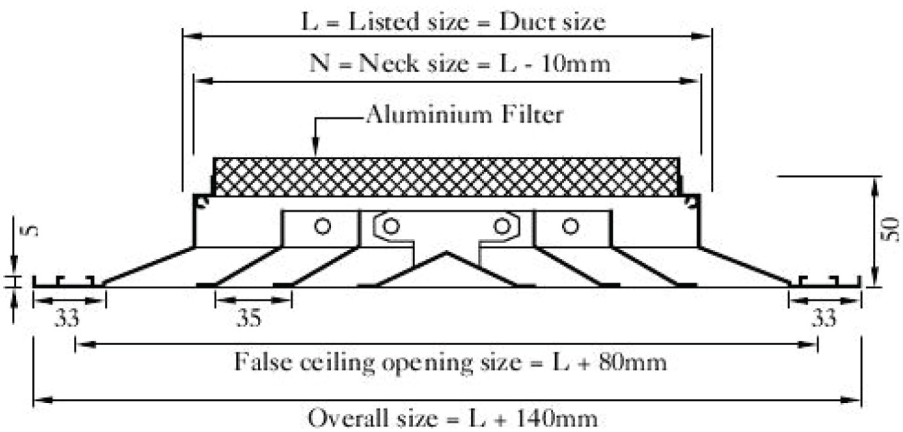

SQUARE DIFFUSER

Supply Air Diffuser - Air Flow Data

- Neck velocity is measured in m/sec.
- PS: Static pressure loss across the diffuser in inch of water gauge.
- Throw in (m) is measured for terminal velocities of 0.75, 0.5 and 0.25 m/sec.
- Noise criteria based on room attenuation of 10 dB.

One Way Throw - AP-DS1-D

Neck Velocity in m/sec	Neck size in mm x mm	150 x150	225 x 225	300 x 300	375 x 375	450 x 450	525 x 525	600 x 600
	Area factor in (m2)	(0.0098)	0.018	(0.03)	(0.046)	(0.0695)	(0.099)	(0.139)
1	Total CFM	50	110	192	300	432	586	760
	(Ps) Inwg	0.026	0.026	0.026	0.042	0.042	0.042	0.042
	Throw in M	1.3-2-2.7	1.3-2-2.7	2.4-3.5-5.5	2.7-4.1-6.2	3.5-5.2-8.5	4.1-5.8-9.5	4.5-6.5-11.6
	Noise level	‹15	‹15	‹15	‹15	‹15	15	16
1.5	Total CFM	74	162	284	448	642	876	1142
	(Ps) Inwg	0.042	0.055	0.07	0.084	0.084	0.095	0.095
	Throw in M	2-2.8-3.6	2.0-2.8-3.9	3.6-5.0-7.1	4.6-6.4-8.8	5.3-7.4-10.6	6-8.8-12.6	6.7-9.1-14
	Noise level	16	17	17	18	20	23	26
2	Total CFM	96	216	382	594	860	1166	1526
	(Ps) Inwg	0.084	0.111	0.126	0.14	0.154	0.164	0.164
	Throw in M	2.8-3.7-4.4	2.9-3.7-5.2	4.8-5.9-8.8	6.2-7.3-10.6	7.9-9.1-12.8	8.4-10.2-15	9.1-12-17.1
	Noise level	21	24	26	28	30	32	33
2.5	Total CFM	19	270	478	744	1072	1462	1908
	(Ps) Inwg	0.14	0.166	0.21	0.223	0.252	0.265	0.265
	Throw in M	3.3-4.2-4.9	3.8-5.3-6.8	5.7-7.2-9.8	7.2-8.7-12.5	8.3-10.5-5-15	9.8-12-17.4	10.5-14-20
	Noise level	27	30	33	35	36	37	38
3	Total CFM	145	324	574	890	1285	1755	2288
	(Ps) Inwg	0.198	0.24	0.295	0.322	0.365	0.38	0.38
	Throw in M	4-4.7-5.9	5.1-7-9.3	6.3-7.4-11	7.8-9-7-14.5	9.7-11.8-17	10.9-14-20	12.16-20.23
	Noise level	34	36	38	40	41	42	42
3.5	Total CFM	168	377	670	1045	1502	2032	1665
	(Ps) Inwg	0.252	0.326	0.41	0.452	0.452	0.446	0.468
	Throw in M	4.4-5.5-6.2	7-8.6-11.6	7-8.6-12.5	8.6-10.5-15.6	10.5-13-18	12-14.8-12.5	12.8-18.2-24
	Noise level	39	41	43	44	44	45	45

SQUARE DIFFUSER

Two Way Throw - AP-DS2-D

Neck Velocity in m/sec	Neck size in mm x mm	150 x150	225 x 225	300 x 300	375 x 375	450 x 450	525 x 525	600 x 600
	Area factor in (m2)	-0.0098	-0.018	-0.03	-0.046	-0.0695	-0.099	-0.139
1	Total CFM	48	110	192	300	432	586	764
	(Ps) Inwg	0.026	0.026	0.026	0.04	0.04	0.04	0.04
	Throw in M	1.3-2-2.7	1.3-2-2.7	2.4-3.5-5.5	2.7-4.1-6.2	3.4-5.2-8.5	4.1-5.8-9.5	4.5-6.5-11
	Noise level	‹15	‹15	‹15	‹15	‹15	15	16
1.5	Total CFM	74	162	288	448	646	875	1142
	(Ps) Inwg	0.035	0.052	0.064	0.078	0.078	0.092	0.092
	Throw in M	2-2.8-3.6	2-2.8-3.9	3.6-4.9-7	4.6-6.3-8.7	5.3-7.4-10	6-8.7-12.6	6.6-9-14
	Noise level	16	17	17	18	20	23	26
2	Total CFM	96	216	382	596	860	1166	1153
	(Ps) Inwg	0.082	0.108	0.122	0.148	0.162	0.162	0.162
	Throw in M	2.8-3.7-4.4	2.9-3.7-5.1	4.7-5.8-8.6	6.1-7.2-10.4	8.3-10-15	8.3-10-15	9-11.8-16.9
	Noise level	21	24	26	28	30	32	33
2.5	Total CFM	120	270	478	746	1072	1461	1908
	(Ps) Inwg	0.134	0.162	0.202	0.218	0.263	0.258	0.258
	Throw in M	3.2-4-4.8	3.7-5.2-6.6	5.5-6.9-9.5	6.9-8.4-12.1	8-10.2-14.6	9.5-11.8-17	10.2-13.6-19
	Noise level	27	30	33	35	36	37	38
3	Total CFM	145	323	572	895	1288	1758	2289
	(Ps) Inwg	0.192	0.232	0.287	0.314	0.352	0.368	0.368
	Throw in M	3.8-4.5-5.6	4.8-6.7-9	5.9-7.1-11	7.4-9.3-14	9.3-11-16-3	10.4-13.4-19	11.4-15.2-22
	Noise level	34	36	38	40	41	42	42
3.5	Total CFM	168	375	668	1045	1502	2035	2670
	(Ps) Inwg	0.242	0.307	0.388	0.428	0.479	0.435	0.435
	Throw in M	4.1-5.2-6	6.7-8.2-11	6.7-8.4-12	8.1-10-14.9	10-12.3-17	11.6-14.1-30	12.2-16-23
	Noise level	39	41	43	44	44	45	45

SQUARE DIFFUSER

Three Way Throw - AP-DS3-D

Neck Velocity in m/sec	Neck size in mm x mm	150 x150	225 x 225	300 x 300	375 x 375	450 x 450	525 x 525	600 x 600
	Area factor in (m2)	(0.0098)	(0.018).	(0.03).	(0.046).	(0.0695).	(0.099).	(0.139).
1	Total CFM	48	110	192	300	432	586	762
	(Ps) Inwg	0.025	0.025	0.025	0.031	0.031	0.031	0.031
	Throw in each side of X - (M)	1.2-1,8-2.4	1.2-1.8-2.4	2.1-3.1-4.9	2.1-3.7-5.5	3.1-4.6-7.6	3.7-5.2-8.5	4-5.8-10.1
	Throw Y side - (M)	1.2-1.8-2.5	1.2-1.8-2.5	2.1-3.3-5.2	2.5-3.9-5.8	3.2-4.9-8.1	3.9-5.6-9.2	4.2-6.2-10.7
	Noise level	‹15	‹15	‹15	‹15	‹15	15	16
2	Total CFM	75	163	286	450	642	875	1145
	(Ps) Inwg	0.035	0.048	0.057	0.069	0.069	0.08	0.08
	Throw in each side of X - (M)	1.8-2.4-3.1	1.8-2.4-3.4	3.1-4.3-6.1	4.0-5.5-7.6	4.6-06.4-9.1	5.2-7.6-11	5.8-8-12.2
	Throw Y side - (M)	1.8-2.6-3.4	1.826-3.7	3.4-4.8-6.5	4.3-5.9-8.2	4.9-6.8-9.5	5.6-8.2-11.9	6.2-8.3-13.1
	Noise level	16	17	17	18	20	23	26
3	Total CFM	97	216	381	596	860	1167	1526
	(Ps) Inwg	0.07	0.092	0.105	0.115	0.125	0.14	0.14
	Throw in each side of X - (M)	2.4-3.1-3.7	2.4-3.1-4.3	4.0-4.9-7.3	5.2-6.1-8.8	6.6-7.6-10.7	7.0-8.5-12.5	7.6-10-14.3
	Throw Y side - (M)	2.6-3.4-4.0	2.6-3.4-4.7	4.3-5.4-8.0	5.8-6.7-9.4	7.2-8.7-12.5	7.0-8.5-12.5	8.4-10.9-15.4
	Noise level	21	24	26	28	30	32	33
4	Total CFM	122	271	478	746	1075	1465	1908
	(Ps) Inwg	0.115	0.138	0.175	0.183	0.205	0.216	0.216
	Throw in each side of X - (M)	2.7-3.4-4	3.1-4.3-5.5	4.6-5.8-7.9	5.8-7.0-10.1	6.7-8.5-12.2	7.9-9.8-14	8.5-11.3-16.1
	Throw Y side - (M)	3.0-3.7-4.4	3.4-4.8-6.1	5.1-6.3-8.5	6.4-7.6-10.9	7.2-9.2-13.4	8.5-10.4-5.4	9.3-12.1-17.6
	Noise level	27	30	33	35	36	37	38
5	Total CFM	146	325	573	895	1290	1760	2290
	(Ps) Inwg	0.162	0.196	0.24	0.264	0.298	0.31	0.31
	Throw in each side of X - (M)	3.1-3.7-4.6	4.0-5.5-7.3	4.9-5.8-9.1	6.1-7.6-11.3	7.6-9.2-13.4	8.5-11-15.9	9.4-12.5-18
	Throw Y side - (M)	3.5-4.1-5.1	4.4-6.1-8.2	5.4-6.6-10.1	6.7-8.3-12.5	8.3-10.2-15.4	9.4-12.5-17.7	10.2-14.0-20
	Noise level	34	36	38	40	41	42	42
6	Total CFM	170	373	670	1045	1503	2034	2670
	(Ps) Inwg	0.208	0.23	0.334	0.368	0.414	0.38	0.38
	Throw in each side of X - (M)	3.4-4.3-4.9	5.5-6.7-9.1	5.5-6.7-9.8	6.7-8.2-12.2	8.2-10.1-14	9.5-11.6-16.8	10-13.4-19.5
	Throw Y side - (M)	3.7-4.7-5.4	6.1-7.5-10.1	6.2-7.7-10.6	7.4-9.1-13.4	9.1-11.3-15.6	10.6-13.1-17.8	11.2-15.0-21.6
	Noise level	39	41	43	44	44	45	45

SQUARE DIFFUSER

Four Way Throw - AP-DS4-D

Neck Velocity in m/sec	Neck size in mm x mm	150 x150	225 x 225	300 x 300	375 x 375	450 x 450	525 x 525	600 x 600
	Area factor in (m2)	(0.0098)	(0.018)	(0.03)	(0.046)	(0.0695)	(0.099)	(0.139)
1	Total CFM	50	110	95	300	432	588	765
	(Ps) Inwg	0.022	0.022	0.022	0.032	0.032	0.032	0.032
	Throw in M	1.2-1,8-2.4	1.2-1.8-2.4	2.1-3.1-4.9	2.1-3.7-5.5	3.1-4.6-7.6	3.7-5.2-8.5	4-5.8-10.4
	Noise level	‹15	‹15	‹15	‹15	‹15	15	16
1.5	Total CFM	72	162	288	449	645	876	1142
	(Ps) Inwg	0.032	0.038	0.048	0.06	0.06	0.072	0.072
	Throw in M	1.8-2.4-3.1	1.8-2.4-3.4	3.1-4.3-6.1	4.0-5.5-7.6	4.6-06.4-9.1	5.2-7.6-11	5.8-8-12.2
	Noise level	16	17	17	18	20	23	26
2	Total CFM	98	216	382	595	856	1162	1525
	(Ps) Inwg	0.062	0.08	0.093	0.1	0.11	0.122	0.122
	Throw in M	2.4-3.1-3.7	2.4-3.1-4.3	4.0-4.9-7.3	5.2-6.1-8.8	5.6-7.6-10.7	7.0-8.5-12.5	7.6-10-14.3
	Noise level	21	24	26	28	30	32	33
2.5	Total CFM	120	270	475	745	1070	1460	1905
	(Ps) Inwg	0.101	0.123	0.152	0.162	0.182	0.192	0.192
	Throw in M	2.7-3.4-4	3.1-4.3-5.5	4.6-5.8-7.9	5.8-7-10.1	6.7-8.5-12.2	7.9-9.8-14	8.5-11.3-16.1
	Noise level	27	30	33	35	36	37	38
3	Total CFM	146	325	573	895	1290	1760	2290
	(Ps) Inwg	0.142	0.172	0.212	0.23	0.262	0.275	0.275
	Thr ow in M	3.1-3.7-4.6	4-5.5-7.3	4.9-5.8-9.1	6.1-7.6-11.3	7.6-9.2-13.4	8.5-11-15.9	9.4-12.5-18
	Noise level	34	36	38	40	41	42	42
3.5	Total CFM	165	378	670	1045	1502	2035	2670
	(Ps) Inwg	0.182	0.232	0.29	0.322	0.36	0.332	0.332
	Throw in M	3.4-4.3-4.0	5.5-6.7-9.1	9.5--6.7-9.8	6.7-8.2-12.2	8.2-10.1-14	9.511-.6-16.8	10-13.4-10.9
	Noise level	39	41	43	44	44	45	45

SQUARE DIFFUSER

Return Air Diffuser - Air Flow Data

- Neck velocity is measured in m/sec.
- PS: Static pressure loss in inch of water gauge
- Noise criteria (NC) based on room attenuation of 10 dB.

One Way - AP-DSI

Neck Velocity in m/sec	Neck size in mm x mm	150 x150	225 x 225	300 x 300	375 x 375	450 x 450	525 x 525	600 x 600
	Area factor in (m2)	(0.0098)	(0.018)	(0.03)	(0.046)	(0.0695)	(0.099)	(0.139)
1	Total CFM	52	110	195	300	432	588	765
	(Ps) Inwg	0.028	0.03	0.032	0.036	0.04	0.042	0.04
	Noise level	‹15	‹15	‹15	‹15	‹15	18	23
1.25	Total CFM	63	136	240	375	540	732	955
	(Ps) Inwg	0.043	0.042	0.048	0.52	0.063	0.065	0.075
	Noise level	‹15	‹15	‹15	‹15	17	25	30
1.5	Total CFM	76	154	288	450	646	878	1145
	(Ps) Inwg	0.062	0.068	0.07	0.083	0.09	0.092	0.104
	Noise level	‹15	‹15	16	19	24	30	36
1.75	Total CFM	88	188	336	521	753	1023	1336
	(Ps) Inwg	0.083	0.089	0.098	0.114	0.124	0.132	0.144
	Noise level	‹15	16	21	25	31	36	40
2	Total CFM	99	218	385	599	862	1170	1525
	(Ps) Inwg	0.108	0.122	0.132	0.15	0.164	0.178	0.19
	Noise level	19	21	25	32	36	40	42
2.5	Total CFM	125	273	475	754	1075	1460	1905
	(Ps) Inwg	0.168	0.188	0.205	0.235	0.255	0.278	0.298
	Noise level	25	28	32	38	40	44	46
3	Total CFM	148	325	575	895	1290	1755	2290
	(Ps) Inwg	0.242	0.269	0.3	0.345	0.364	0.398	0.425
	Noise level	30	34	38	43	45	47	49
3.5	Total CFM	172	380	670	1048	1506	2045	2670
	(Ps) Inwg	0.338	0.382	0	0.47	0.512	0.545	0.598
	Noise level	34	40	43	47	48	51	54
4	Total CFM	198	435	765	1195	1720	2340	3050
	(Ps) Inwg	0.442	0.498	0.55	0.616	0.672	0.728	0.792
	Noise level	40	45	49	51	52	55	58

SQUARE DIFFUSER

Two Way - AP-DS2

Neck Velocity in m/sec	Neck size in mm x mm	150 x150	225 x 225	300 x 300	375 x 375	450 x 450	525 x 525	600 x 600
	Area factor in (m2)	(0.0098)	(0.018)	(0.03)	(0.046)	(0.0695)	(0.099)	(0.139)
1	Total CFM	50	110	195	300	432	584	765
	(Ps) Inwg	0.028	0.03	0.032	0.035	0.039	0.043	0.046
	Noise level	‹15	‹15	‹15	‹15	‹15	18	23
1.25	Total CFM	63	136	240	375	536	732	955
	(Ps) Inwg	0.043	0.046	0.058	0.058	0.062	0.064	0.071
	Noise level	‹15	‹15	‹15	‹15	17	25	30
1.5	Total CFM	76	165	288	450	648	880	1145
	(Ps) Inwg	0.06	0.069	0.075	0.085	0.09	0.098	0.105
	Noise level	‹15	‹15	16	19	24	30	36
1.75	Total CFM	88	190	338	525	755	104	1334
	(Ps) Inwg	0.082	0.085	0.096	0.114	0.124	0.134	0.145
	Noise level	‹15	16	21	25	31	36	40
2	Total CFM	100	218	382	600	862	1170	1525
	(Ps) Inwg	0.105	0.12	0.13	0.148	0.164	0.174	0.186
	Noise level	19	21	25	32	36	40	42
2.5	Total CFM	126	274	478	748	1078	1464	1908
	(Ps) Inwg	0.166	0.185	0.205	0.23	0.25	0.272	0.295
	Noise level	25	28	32	38	40	44	46
3	Total CFM	148	325	575	898	1290	1755	2288
	(Ps) Inwg	0.238	0.265	0.296	0.338	0.36	0.39	0.422
	Noise level	30	34	38	43	45	47	49
3.5	Total CFM	174	380	670	1048	1506	2048	2670
	(Ps) Inwg	0.328	0.371	0.403	0.456	0.498	0.53	0.583
	Noise level	34	40	43	47	48	51	54
4	Total CFM	195	432	762	1194	1719	2337	3049
	(Ps) Inwg	0.426	0.48	0.532	0.595	0.648	0.702	0.765
	Noise level	40	45	48	51	52	55	58

SQUARE DIFFUSER

Three Way-AP-DS3

Neck Velocity in m/sec	Neck size in mm x mm	150 x150	225 x 225	300 x 300	375 x 375	450 x 450	525 x 525	600 x 600
	Area factor in (m2)	(0.0098).	(0.018).	(0.03).	(0.046).	(0.0695).	(0.099).	(0.139).
1	Total CFM	52	110	195	300	432	585	755
	(Ps) Inwg	0.03	0.032	0.036	0.04	0.045	0.048	0.049
	Noise level	‹15	‹15	‹15	‹15	‹15	18	23
1.25	Total CFM	61	135	239	372	538	730	953
	(Ps) Inwg	0.046	0.05	0.056	0.062	0.068	0.072	0.08
	Noise level	‹15	‹15	‹15	‹15	17	25	30
1.5	Total CFM	76	165	288	450	648	880	1145
	(Ps) Inwg	0.06	0.068	0.074	0.082	0	0.098	0.105
	Noise level	‹15	‹15	16	19	24	30	36
1.75	Total CFM	87	190	336	523	753	104	1336
	(Ps) Inwg	0.083	0.085	0.1	0.11	0.126	0.126	0.14
	Noise level	‹15	16	21	25	31	36	40
2	Total CFM	100	218	382	598	862	1170	1525
	(Ps) Inwg	0.105	0.12	0.128	0.146	0.159	0.17	0.184
	Noise level	19	21	25	32	36	40	42
2.5	Total CFM	125	273	478	748	1078	1462	1906
	(Ps) Inwg	0.165	0.182	0.202	0.227	0.25	0.27	0.29
	Noise level	25	28	32	38	40	44	46
3	Total CFM	148	320	575	898	1290	1755	2288
	(Ps) Inwg	0.236	0.263	0.295	0.335	0.358	0.386	0.417
	Noise level	30	34	38	43	45	47	49
3.5	Total CFM	172	380	667	1048	1508	2045	2670
	(Ps) Inwg	0.325	0.368	0.398	0.448	0.492	0.522	0.573
	Noise level	34	40	43	47	48	51	54
4	Total CFM	198	435	765	1195	1720	2340	3050
	(Ps) Inwg	0.422	0.475	0.53	0.59	0.642	0.695	0.756
	Noise level	40	45	48	51	52	55	58

SQUARE DIFFUSER

Four Way - AP-DS4

Neck Velocity in m/sec	Neck size in mm x mm	150 x150	225 x 225	300 x 300	375 x 375	450 x 450	525 x 525	600 x 600
	Area factor in (m2)	(0.0098).	(0.018).	(0.03).	(0.046).	(0.0695).	(0.099).	(0.139).
1	Total CFM	52	110	195	300	432	586	765
	(Ps) Inwg	0.027	0.028	0.032	0.035	0.04	0.042	0.046
	Noise level	‹15	‹15	‹15	‹15	‹15	18	23
1.25	Total CFM	63	138	240	372	540	732	953
	(Ps) Inwg	0.042	0.04	0.05	0.057	0.06	0.066	0.072
	Noise level	‹15	‹15	‹15	‹15	17	25	30
1.5	Total CFM	76	165	288	450	648	880	1143
	(Ps) Inwg	0.06	0.06	0.072	0.082	0.088	0.95	0.1
	Noise level	‹15	‹15	16	19	24	30	36
1.75	Total CFM	86	189	337	521	752	1023	1334
	(Ps) Inwg	0.078	0.085	0.095	0.11	0.12	0.128	0.138
	Noise level	‹15	16	21	25	31	36	40
2	Total CFM	97	216	381	597	860	1168	1524
	(Ps) Inwg	0.1	0.115	0.126	0.142	0.156	0.168	0.18
	Noise level	19	21	25	32	36	40	42
2.5	Total CFM	125	273	476	748	1078	1463	1906
	(Ps) Inwg	0.16	0.174	0.198	0.22	0.24	0.26	0.28
	Noise level	25	28	32	38	40	44	46
3	Total CFM	146	324	572	896	1289	1753	2287
	(Ps) Inwg	0.226	0.252	0.282	0.322	0.342	0.372	0.4
	Noise level	30	34	38	43	45	47	49
3.5	Total CFM	174	380	670	1049	1508	2048	2670
	(Ps) Inwg	0.312	0.352	0.38	0.43	0.472	0.5	0.55
	Noise level	34	40	43	47	48	51	54
4	Total CFM	196	435	765	1195	1720	2340	3050
	(Ps) Inwg	0.402	0.45	0.5	0.562	612	0.66	0.72
	Noise level	40	45	48	51	52	55	58

A Member of AADTRA Group
AIRPRO INDUSTRIES LLC

Tel: +971 4 340 8535

Sector No. 6 Plot No.12, P.O Box. 2890
Umm Al Quwain, United Arab Emirates
Email: info@airprome.com
www.airprome.com